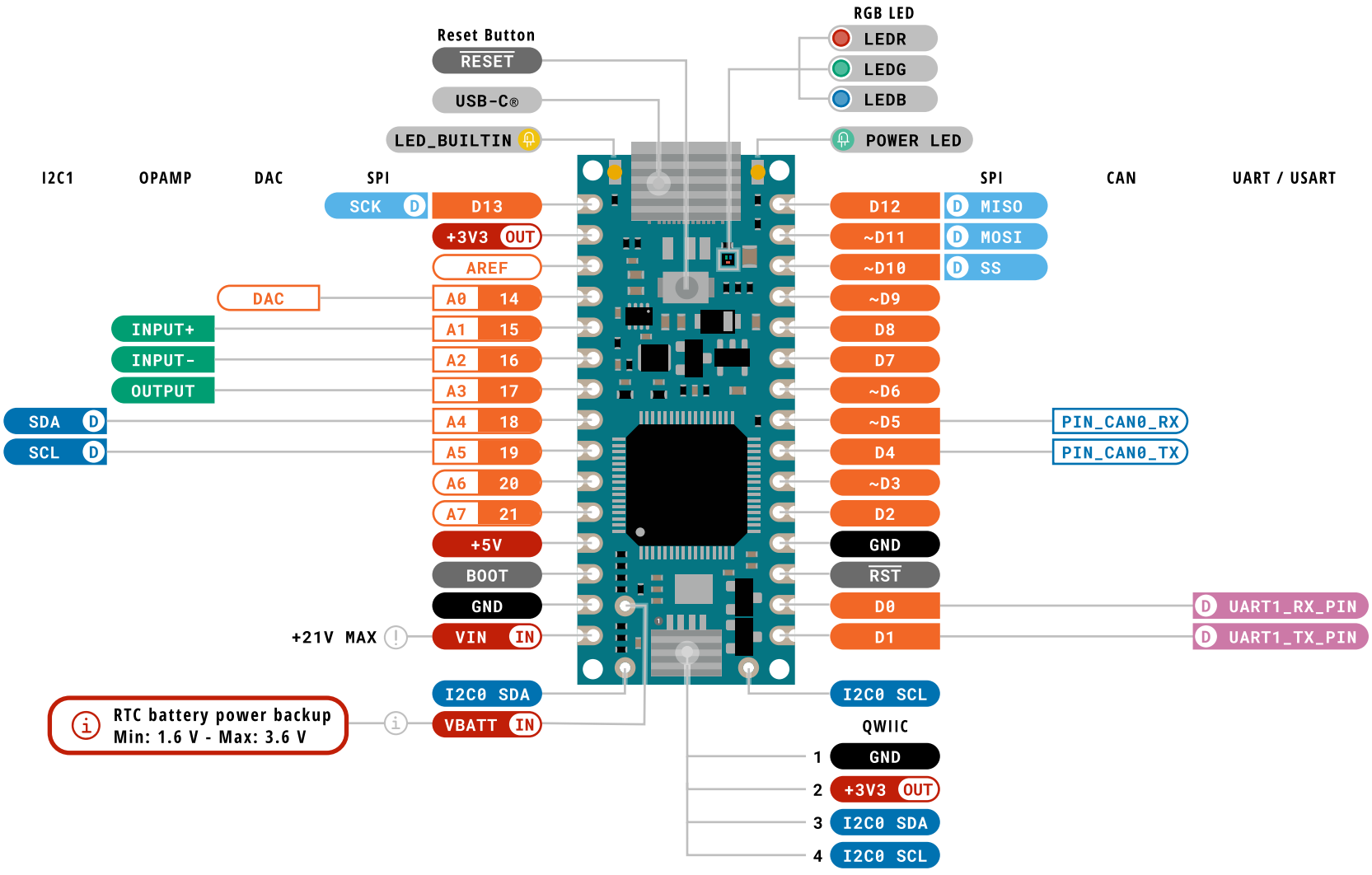

Legend:			
	Digital	SPI	Internal Component
Power	Analog	UART/USART	Other Pins
Ground	I2C	D Default	OPAMP

ARDUINO

Nano R4
SKU code: ABX00142
Pinout
Last update: 11 Jul, 2025